Monaco Ride Height Adjustment Procedure

Ride Height Adjustment Procedures

Start by checking the distance in the front.

1. Measure the distance between the mounting plates of the air springs.
2. If the measurement is off, loosen the adjusting lock nut at the eccentric slot on the valve.
3. Move the plastic arm up to raise suspension height and inflate all the front air springs. Move the plastic arm down to lower suspension height and deflate the air springs. Make adjustments in small increments.
4. After obtaining the specified distance, insert a 1/8" or 7/64" inch twist drill bit into the plastic arm and valve body. This will center the travel of internal piston. Tighten adjusting lock nut between 60-80 in/lbs.
5. Check adjustments made by using the Air Dump switch to deflate air springs. Start the engine and allow the air system to become fully charged. Allow the suspension to adjust and come to a neutral setting.
6. Re-check the suspension height measurement. Follow the same procedure for each rear control valve.
7. Re-check the front suspension height after adjusting the rear height control valves.

NOTE:
Do not modify length of the linkage rods. Make any necessary adjustments using eccentric slot on the ride height control valve.

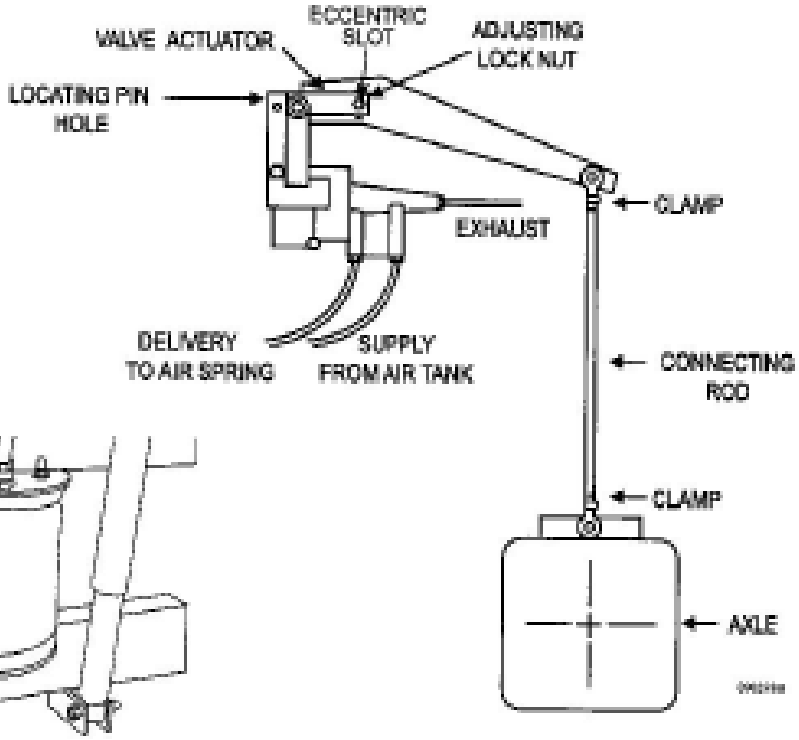

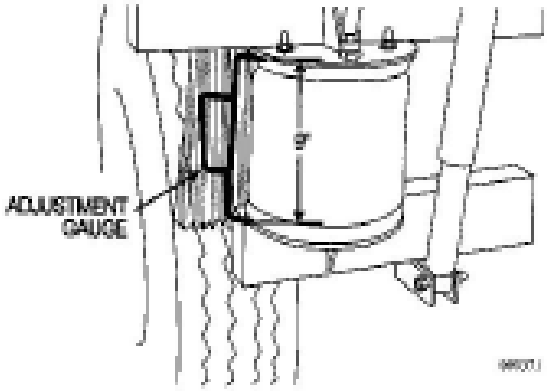

Measurement is: Front = 9 in., Rear = 9 in.

Note: These measurements are for example only. Contact Monaco for your coaches measurements.
(MCOA)